DO NOT SCALE - IF IN DOUBT, ASK

SETTING OUT CO-ORDINATES (WG31)		
POSITION	X CO-ORDINATES	Y CO-ORDINATES
A	3306799.207	-1158.7863
B	3306789.767	-1168.9899

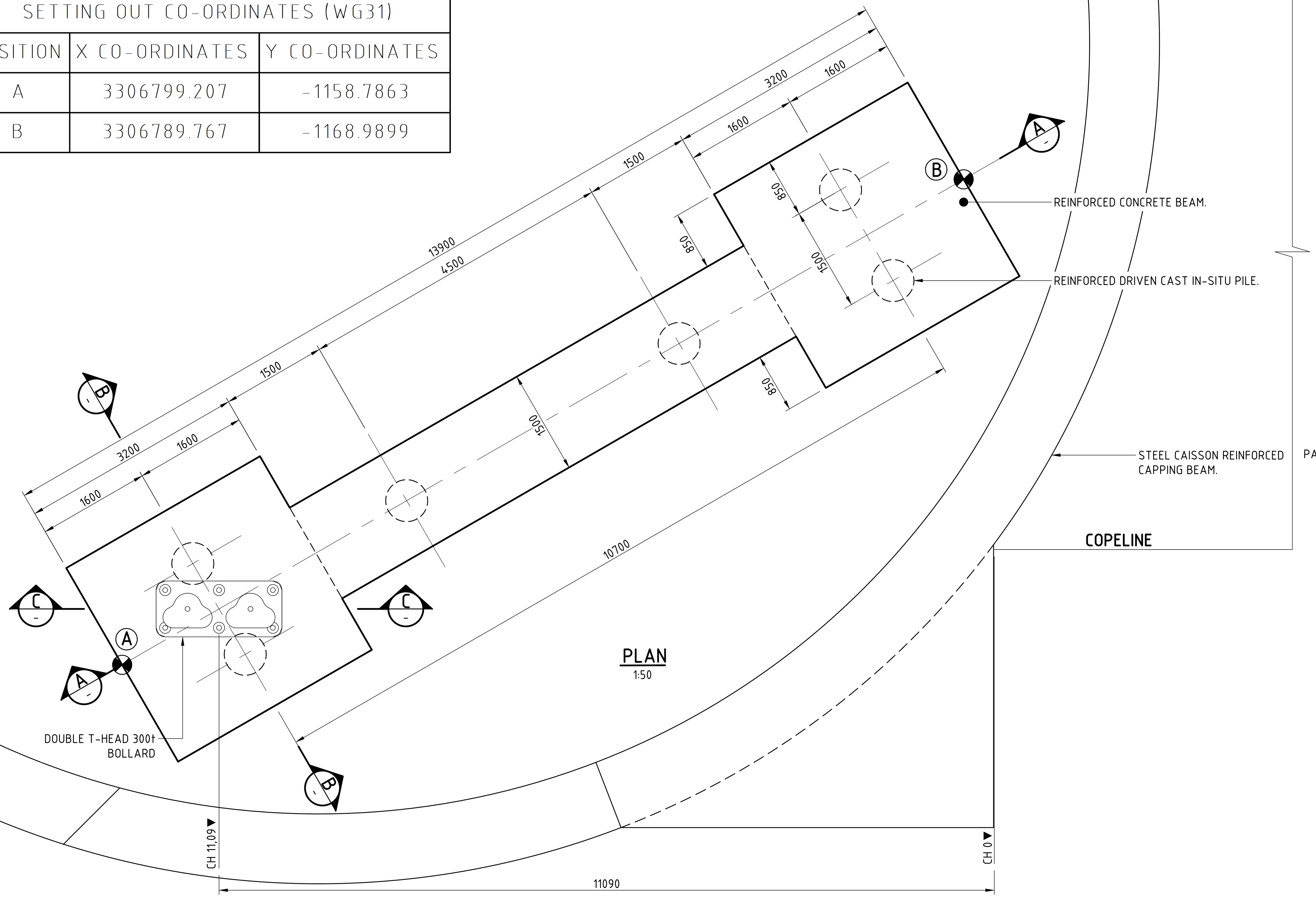

PLAN
1:50

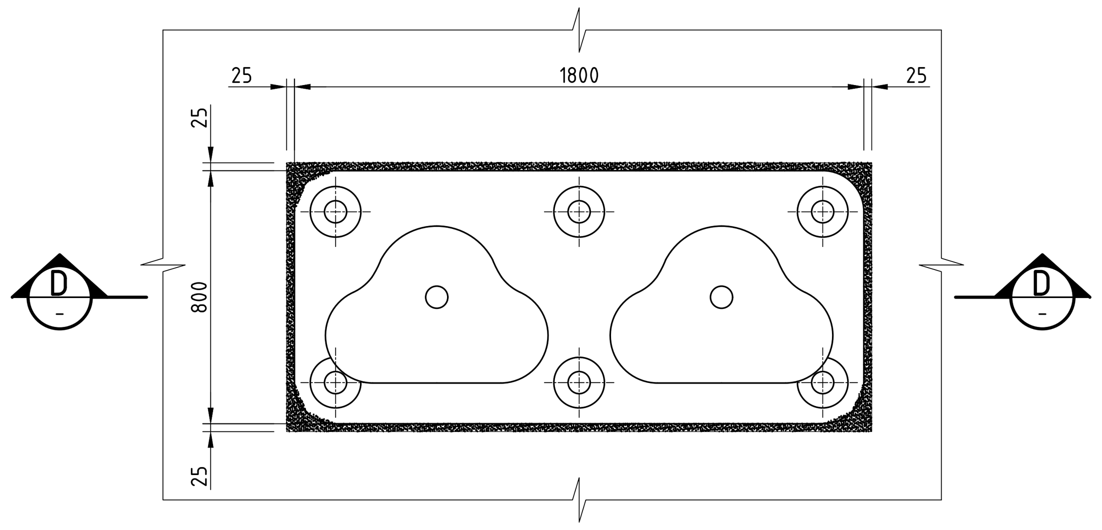

SECTION C BOLLARD RECESS
1:20

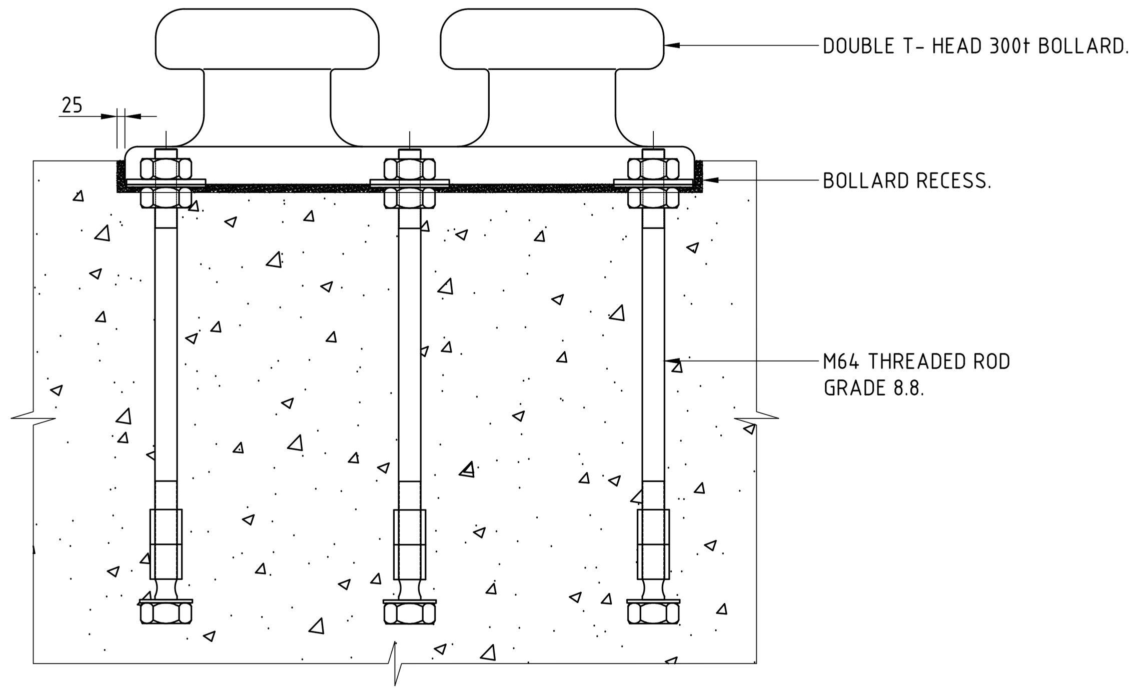

SECTION D
1:20

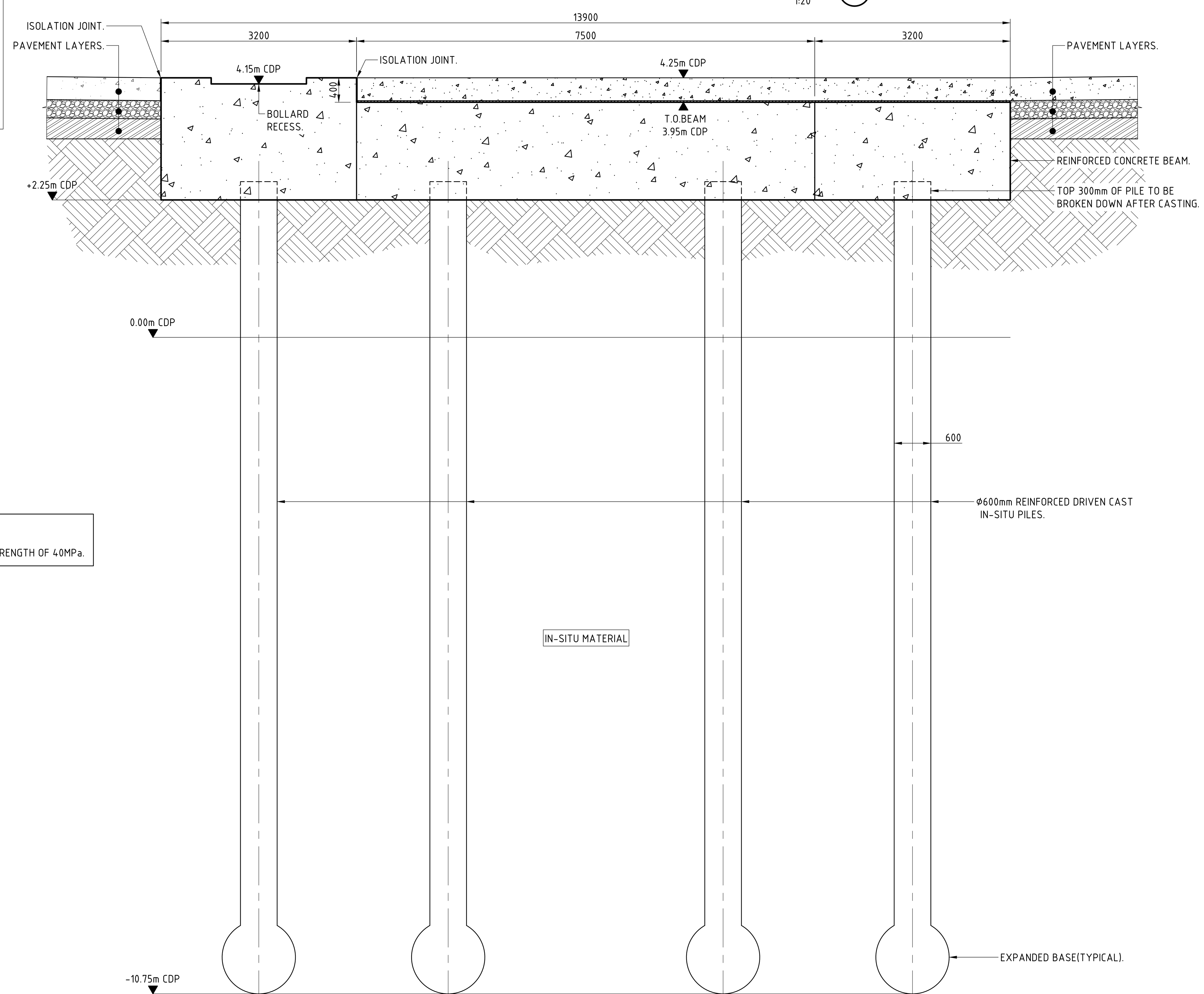

SECTION A
1:50

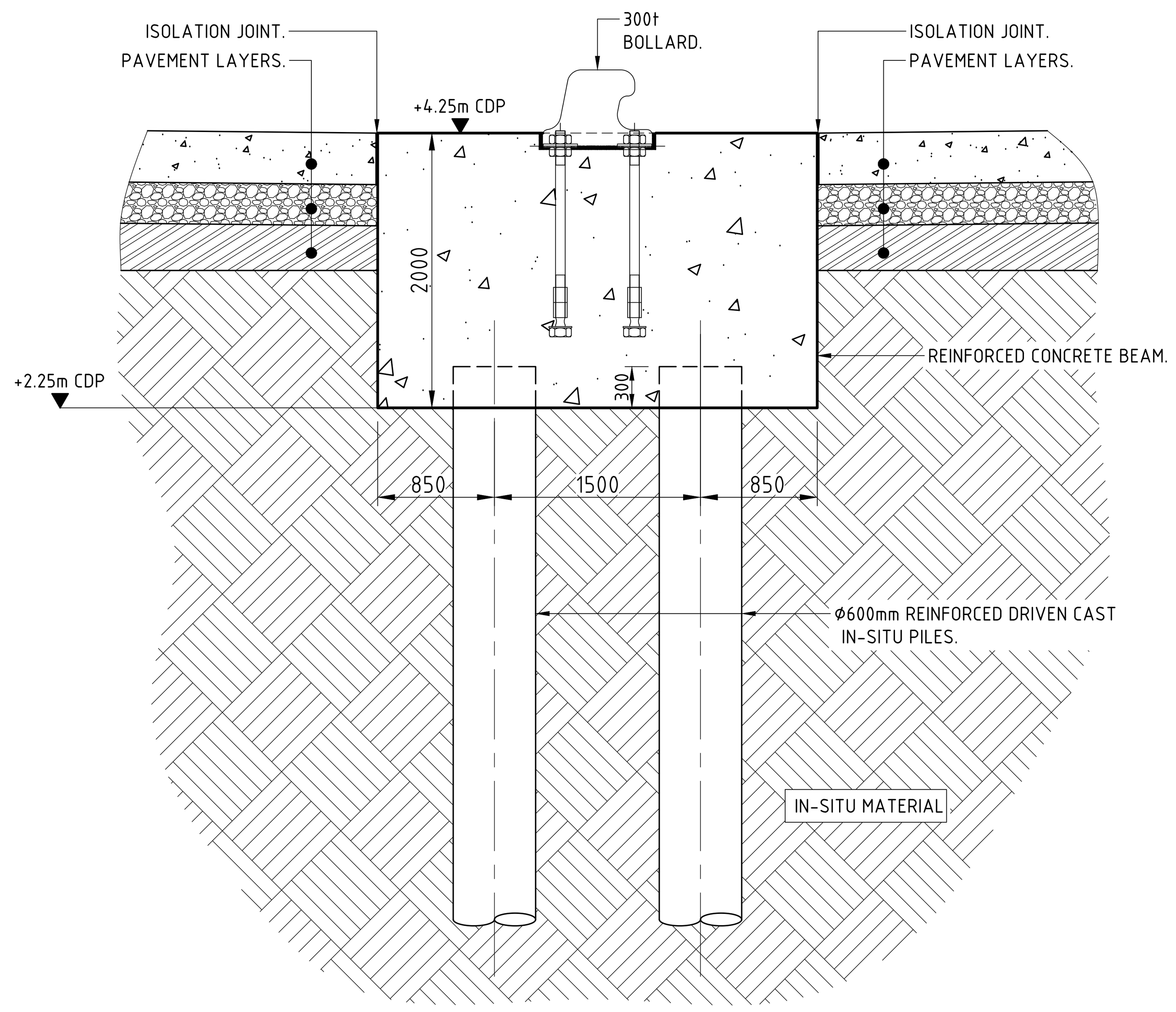

SECTION B
1:40

NOTES:

1. ALL CONCRETE SHALL HAVE A 28 DAY COMPRESSIVE STRENGTH OF 40MPa.

DRAWING NO.	REFERENCE
1785-CO-110-C-DWG-0003-01	MANUFACTURING DETAILS (BOLLARD)

REFERENCE DRAWINGS

Engineers

P O Box 26546
HOUT BAY 7872
Tel: +27(21) 791 9100
E-Mail: zaaepna@zaaepna.com

31 Melkhout Crescent
Hout Bay 7806
Fax: +27(21) 790 4470

PROJECT NO	DIS CODE	AREA	DISP	TYPE	DRG NO	SHEET	STATUS	REV
1785	C0	070	C	DWG	0005	01	T	0A

NO.	DESCRIPTION	BY	CHK'D	APP'D	DATE
0A	ISSUED FOR TENDER	AS	MC	JZ	2019.07.26

REVISIONS / ISSUE AUTHORIZATION

This Document including all design and information therein is Confidential Intellectual Property of ZAA Engineering Projects and Naval Architecture (Pty) Ltd. Copyright and all other rights are reserved by ZAA. This Document may only be used for its intended purpose.

EPCM CONSULTANT: TNPA

TITLE	NAME	SIGNATURE	DATE
LEAD DES. ENG.			
ENG. COORD.			
ENG. MANAGER			
AREA MANAGER			
PROJECT MGR.			

DIVISION

DIV.	TITLE	NAME	SIGNATURE	DATE

ORIGINATOR: ZAA

TITLE	NAME	SIGNATURE	DATE
DRAWN	AS	AS	19 07 26
CHECKED	MC/WvW	WvW	19 07 26
ENG. COORD.			
DISCIP. ENG.			
ENG. MANAGER			
AREA MANAGER			

PR.ENG. / PR.TECH.

NAME	J. ZIETSMAN	DATE
SIGNATURE	J. Zietsman	19 07 26
REG. NUMBER	760293	
SCALE :	AS SHOWN	OR AS NOTED A1

Transnet National Ports Authority
237 MAHATMA GANDHI ROAD
DURBAN
P.O. BOX 31683, DURBAN
TEL: 031 361 8852

TRANSNET

PORT OF DURBAN

DCT BERTHS 203 to 205 RECONSTRUCTION DEEPENING AND LENGTHENING

RETURN QUAY BOLLARD (300t) CONCRETE DETAILS

PROJECT NUMBER	DV	FBS	DIS.	TYPE	DRG. NO.	SHT.	REV.	ID
212830	1	070	C	GA	1004	01	0A	AS